City of Taunton

Instructions on How to make a Face Mask

DUE TO COVID 19/Coronavirus

Materials

- Two 10”x6” rectangles of cotton fabric
- Two 6” pieces of elastic (or rubber bands, string, cloth strips, or hair ties)
- Needle and thread (or bobby pin)
- Scissors
- Sewing machine

Tutorial

1. Cut out two 10-by-6-inch rectangles of cotton fabric. Use tightly woven cotton, such as quilting fabric or cotton sheets. T-shirt fabric will work in a pinch. Stack the two rectangles; you will sew the mask as if it was a single piece of fabric.

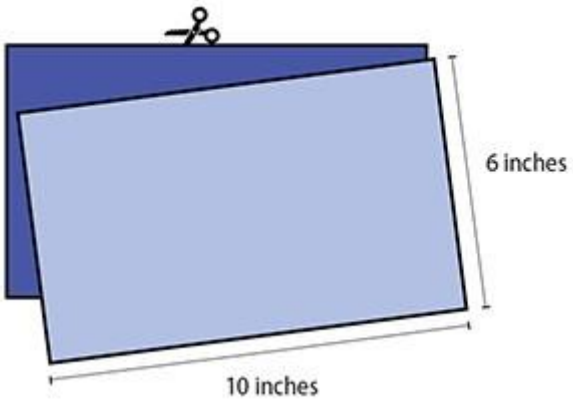

2. Fold over the long sides ¼ inch and hem. Then fold the double layer of fabric over ½ inch along the short sides and stitch down.

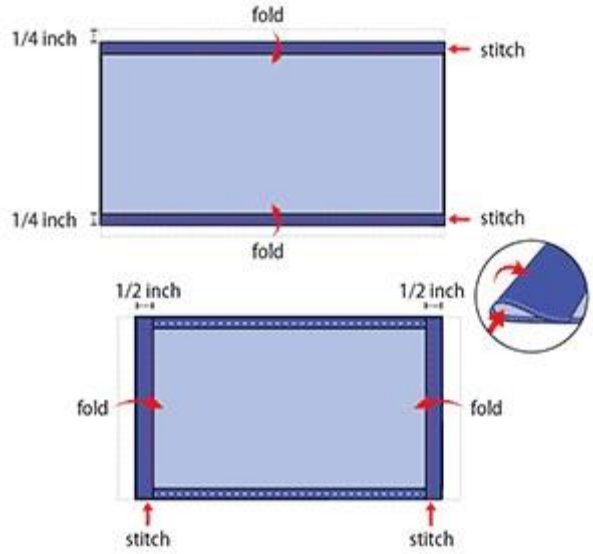

3. Run a 6-inch length of 1/8-inch wide elastic through the wider hem on each side of the mask. These will be the ear loops. Use a large needle or a bobby pin to thread it through. Tie the ends tight.

Don't have elastic? Use hair ties or elastic head bands. If you only have string, you can make the ties longer and tie the mask behind your head.

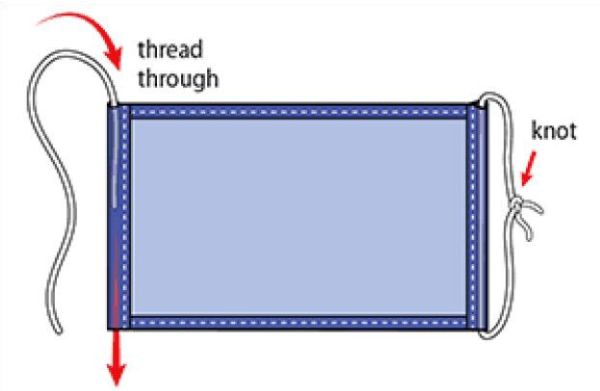

4. Gently pull on the elastic so that the knots are tucked inside the hem. Gather the sides of the mask on the elastic and adjust so the mask fits your face. Then securely stitch the elastic in place to keep it from slipping.

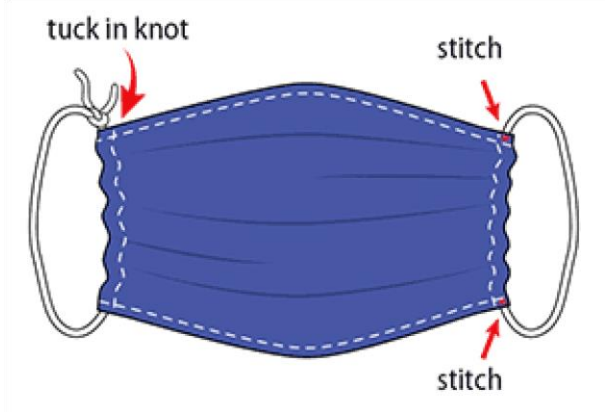

Quick Cut T-shirt Face Covering (no sew method)

Materials

- T-shirt
- Scissors

Tutorial

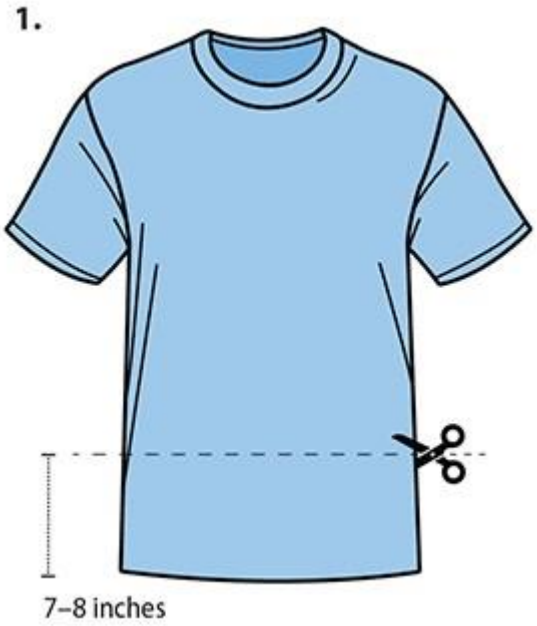

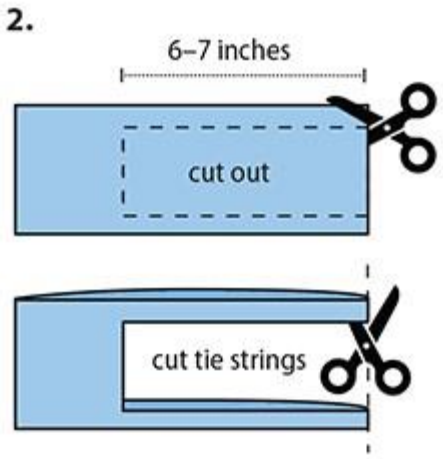

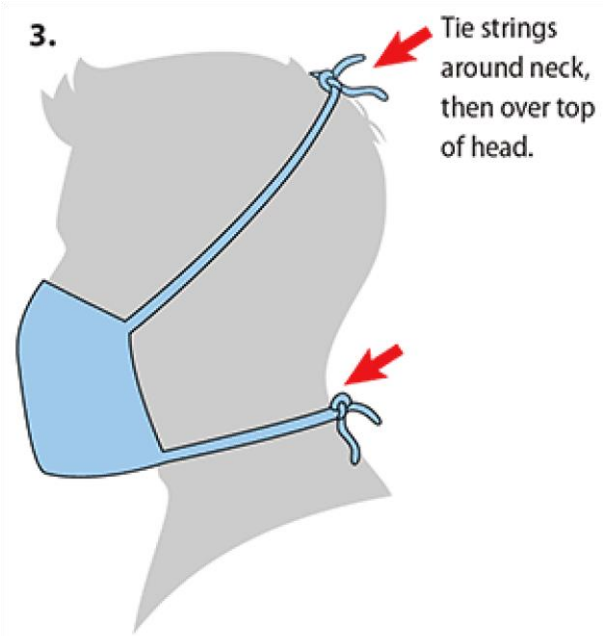

Bandana Face Covering (no sew method)

Materials

- Bandana (or square cotton cloth approximately 20”x20”)
- Rubber bands (or hair ties)
- Scissors (if you are cutting your own cloth)

Tutorial

31.

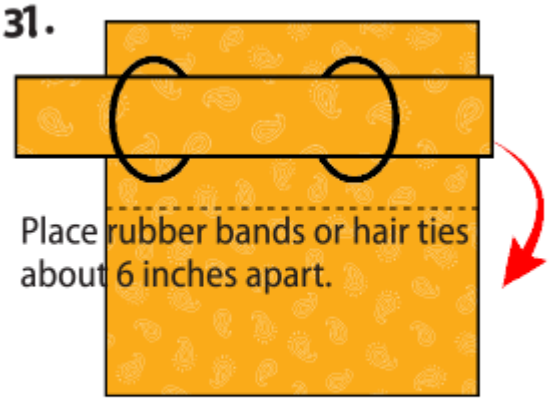

Fold bandana in half.

4.

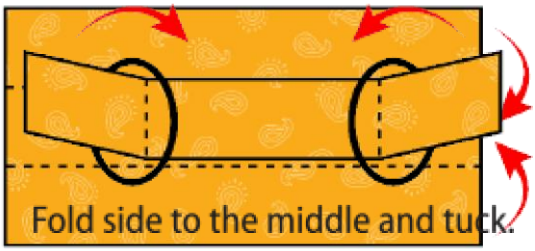

Fold top down. Fold bottom up.

5.

6.

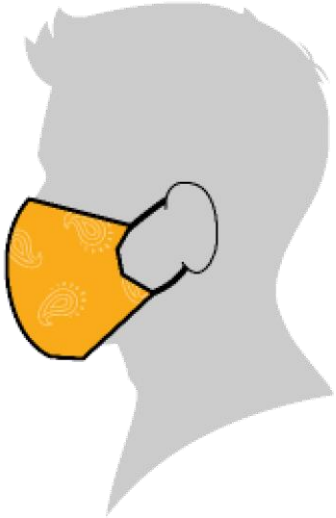

https://www.cdc.gov/coronavirus/2019-ncov/prevent-getting-sick/diy-cloth-face-coverings.html

How to Make a No-Sew Face Mask

1. Lay out a bandana or cut a 22"x 22" square of cotton fabric
2. Place a flat coffee filter in the center of the square *(optional)*
3. Fold the top and bottom in towards the center
4. Place a twist tie, paper clip, or other metal piece close to the top *(optional)*
5. Fold the top and bottom in towards the center
6. Fold the sides in towards the center, placing your ties at the folded crease. If you're using rubber bands or hair ties, loop these around the fabric. If you're using shoelaces or string, place the center of the string in the folded crease and pull the straps tight

7. Tuck one end of the fabric into the other
8. Lift the mask to your face and secure the straps. For hair ties and rubber bands, loop them over each ear. For shoelaces and string, tie them behind your head
9. Adjust as needed, making sure your mouth and nose are completely covered

Check out the video above of Amanda's step-by-step instructions in action.